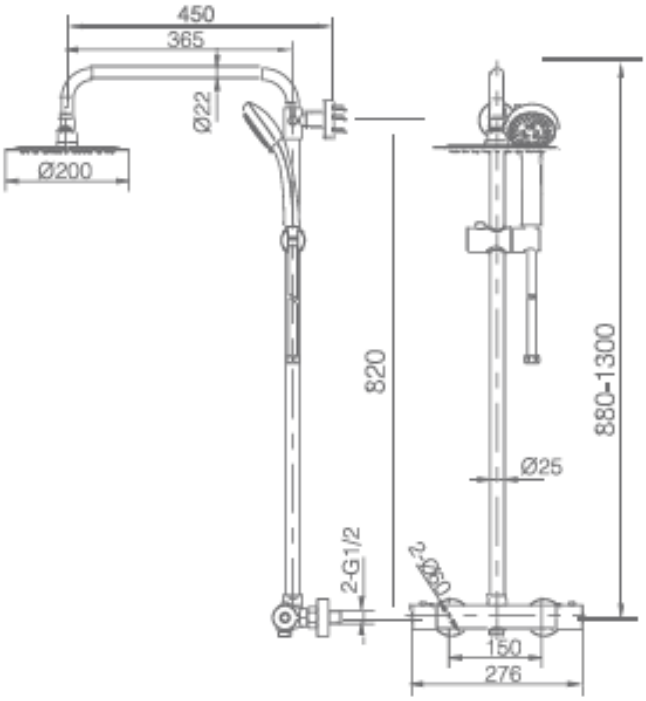
450
365
Ø22
Ø200
820
880-1300
Ø25
2-G1/2
Ø30
150
276

WARRANTY
5 YEARS